DATA SHEET

Single Phase Induction Motor - Squirrel Cage

Customer :

Product line : Farm Duty Single-Phase

Product code : 11762305
Catalog # : FD005104

Frame	: 184T	Locked rotor time	: 10s (cold) 6s (hot)
Output	: 5 HP (3.7 kW)	Temperature rise	: 80 K
Poles	: 4	Duty cycle	: Cont.(S1)
Frequency	: 60 Hz	Ambient temperature	: -20°C to +40°C
Rated voltage	: 230 V	Altitude	: 1000 m.a.s.l.
Rated current	: 21.4 A	Protection degree	: IP55
L. R. Amperes	: 171 A	Cooling method	: IC411 - TEFC
LRC	: 8.0x(Code J)	Mounting	: F-1
No load current	: 10.0 A	Rotation¹	: Both (CW and CCW)
Rated speed	: 1730 rpm	Starting method	: Direct On Line
Slip	: 3.89 %	Approx. weight³	: 51.3 kg
Rated torque	: 2.10 kgfm		
Locked rotor torque	: 370 %		
Breakdown torque	: 270 %		
Insulation class	: F		
Service factor	: 1.15		
Moment of inertia (J)	: 0.0183 kgm²		

Output	25%	50%	75%	100%
Efficiency (%)	70.6	72.0	78.0	79.0
Power Factor	0.53	0.86	0.92	0.95

Foundation loads

Max. traction	: 93 kgf
Max. compression	: 144 kgf

		Drive end	Non drive end
Bearing type	:	6307 ZZ	6206 ZZ
Sealing	:	V'Ring	V'Ring
Lubrication interval	:	-	-
Lubricant amount	:	-	-
Lubricant type	:	Mobil Polyrex EM	

Notes

This revision replaces and cancel the previous one, which must be eliminated.
(1) Looking the motor from the shaft end.
(2) Measured at 1m and with tolerance of +3dB(A).
(3) Approximate weight subject to changes after manufacturing process.
(4) At 100% of full load.

These are average values based on tests with sinusoidal power supply, subject to the tolerances stipulated in NEMA MG-1.

Rev.	Changes Summary	Performed	Checked	Date

Performed by				
Checked by			Page	Revision
Date	13/11/2020		1 / 2	

This document is exclusive property of WEG S/A. Reprinting is not allowed without written authorization of WEG S/A.
Subject to change without notice

LOAD PERFORMANCE CURVE

Single Phase Induction Motor - Squirrel Cage

Customer	:		
Product line	: Farm Duty Single-Phase	Product code :	11762305
		Catalog # :	FD005104

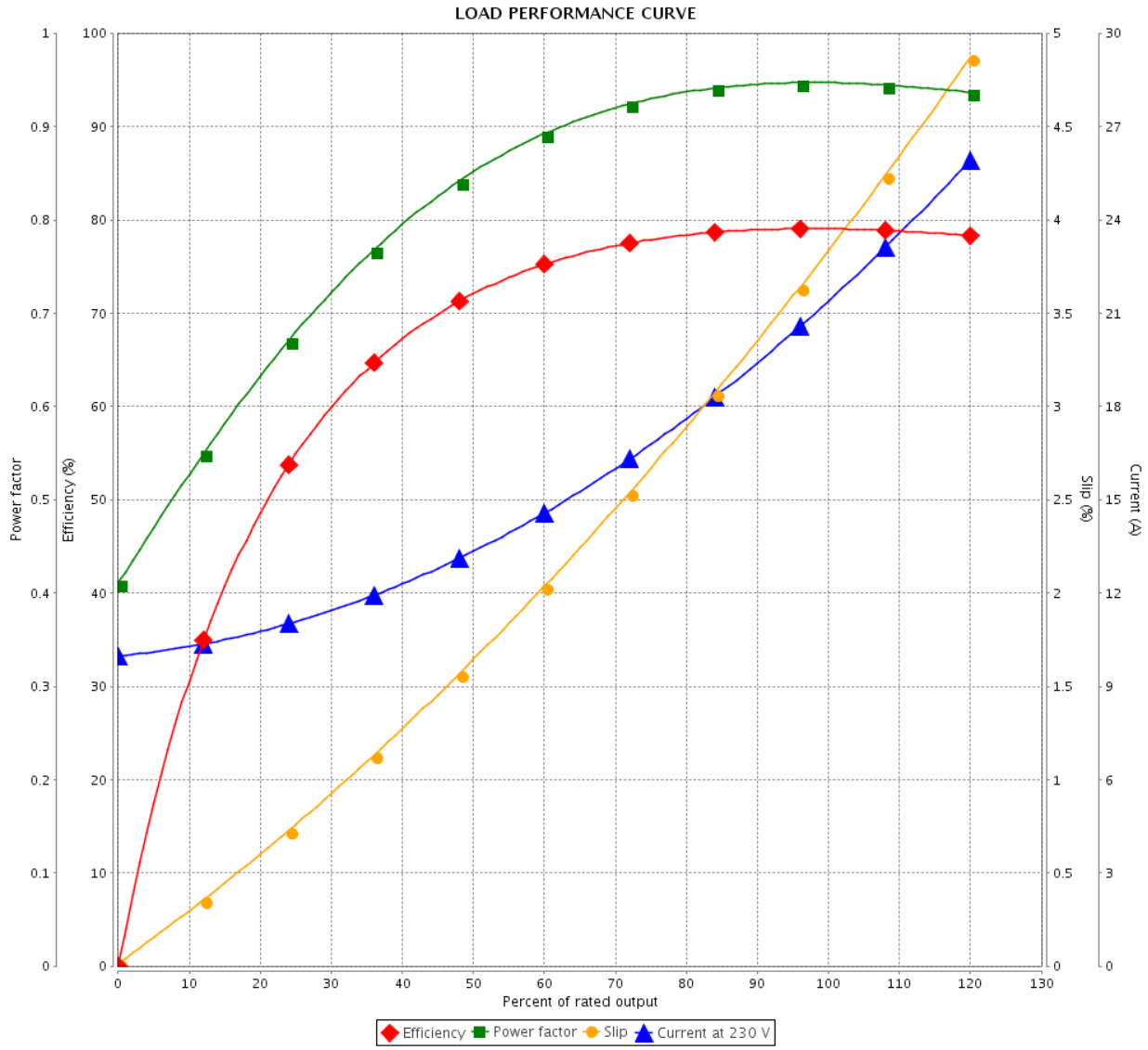

Performance	: 230 V 60 Hz 4P		
Rated current	: 21.4 A	Moment of inertia (J)	: 0.0183 kgm²
LRC	: 8.0	Duty cycle	: Cont.(S1)
Rated torque	: 2.10 kgfm	Insulation class	: F
Locked rotor torque	: 370 %	Service factor	: 1.15
Breakdown torque	: 270 %	Temperature rise	: 80 K
Rated speed	: 1730 rpm		

Rev.	Changes Summary	Performed	Checked	Date

Performed by				
Checked by			Page	Revision
Date	13/11/2020		2 / 2	

This document is exclusive property of WEG S/A. Reprinting is not allowed without written authorization of WEG S/A.
Subject to change without notice

No reproduction of this drawing is allowed written permission of WEG Motores

EIXO	
PADRÃO	X
OPCIONAL	
ESPECIAL	

THIS IS AN UPDATED REVISION, THE PREVIOUS ONE MUST BE DISREGARDED.

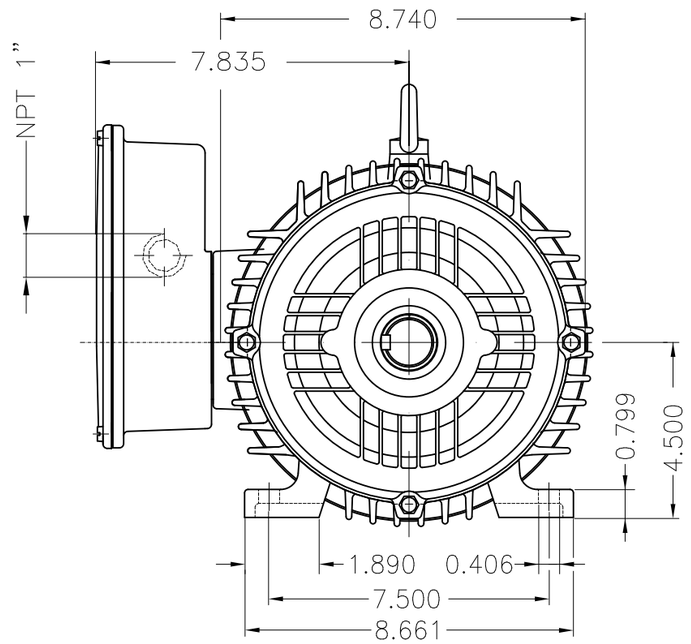

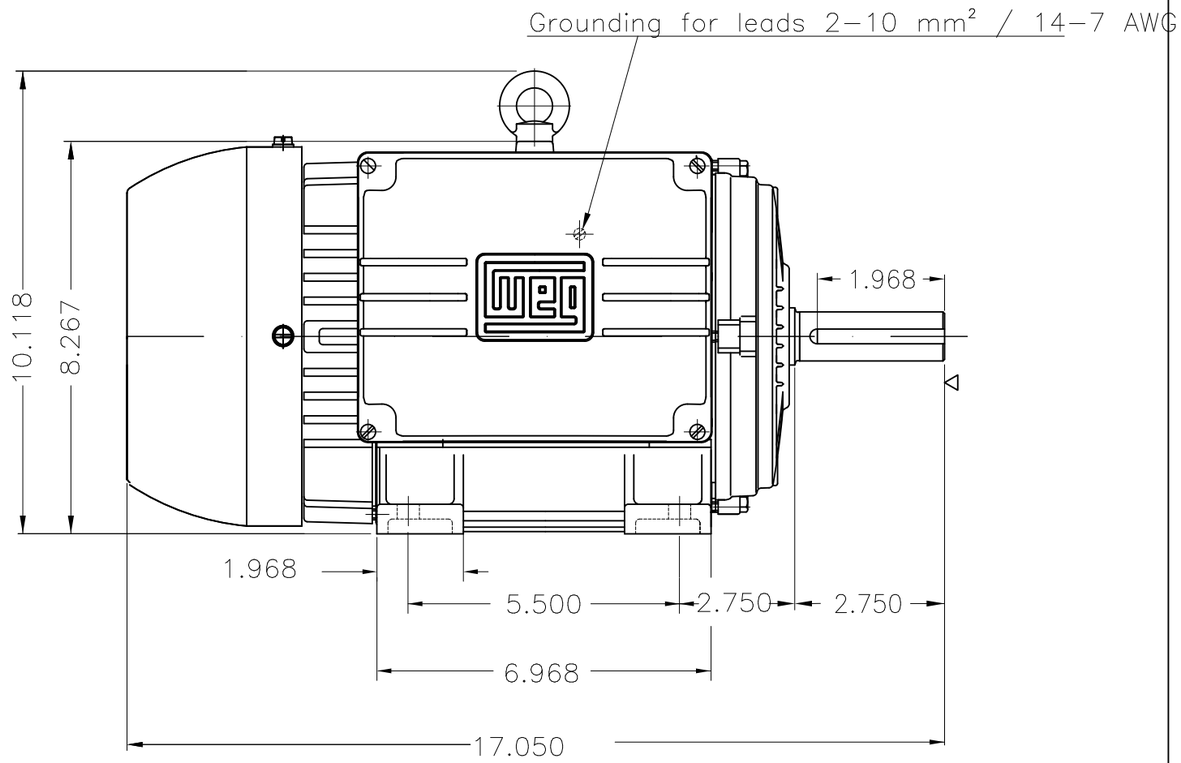

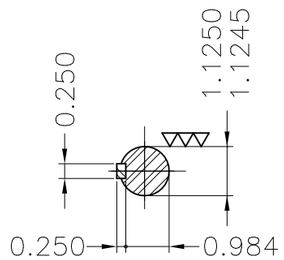

Mounting B3R(D)

ECM	LOC	SUMMARY OF MODIFICATIONS	EXECUTED	CHECKED	RELEASED	DATE	VER

EXECUTED	USERADMIN	SINGLE PHASE MOTOR FARM DUTY	
CHECKED		FRAME 184T IP55 TEFC	
RELEASED		WEG code: 11762305	
REL DT	13.11.2020	WMO	Jaragua do Sul — Product Engineering — SHEET 1 / 1

5 HP 04 Poles 60Hz

A

ZME A3

WEG's property. Forbidden reproduction without previous authorization.